RoHS compliant

Φ27.8 x 17.8(h) mm

DM04

ORDERING CODE:	DMO4 - 24V
	① ②
①	Electronic Buzzer
②	Rated Voltage

NO	SPECIFICATION	DATA
1	Rated Voltage (V)	3 , 6 , 9 , 12 , 24 , 48
2	Operating Voltage (V)	2~5, 5~9, 7~12, 9~15, 20~28, 45~50
3	Tone	Continuous
4	Resonant Frequency (Hz)	300 ~ 500
5	*Sound Output at 10cm (dB)	Min 85
6	*Current Consumption (mA)	Max 30
7	Operating Temperature (℃)	-20 ~ +60
8	Storage Temperature (℃)	-30 ~ +70
9	Weight (g)	12g
10	Housing Material	ABS
11	RoHS	YES
12	Packing Quantity	30pcs/1box

*Applying rated voltage (Resonant frequency, 1/2 duty, Square wave)

DIENSIONS (unit : mm)
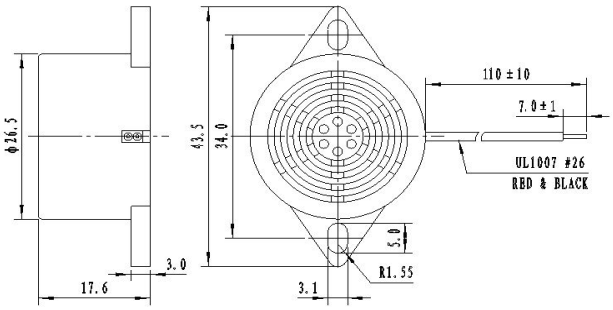
Tolerance: ±0.5mm Except Specified