UF15P(C) Series

Size : 172 x 150 x 51
Unit : mm

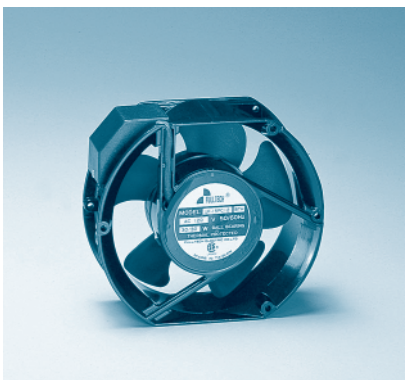

Thermal Protection

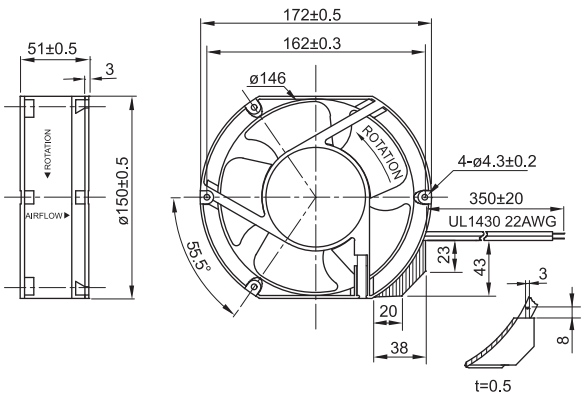

Terminal or Lead Wire Type

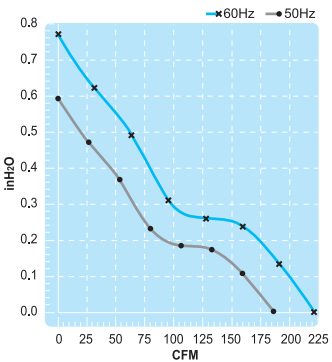

E136370 E136370

Spec. / Model	Rated Voltage V	Frequency Hz	Input Power W	Rated Current A	Locked Current A	Speed RPM	Maximum Air Flow m^3/min.	Maximum Air Flow CFM	Maximum Pressure mmH_2O	Maximum Pressure $InchH_2O$	Noise dB	Weight kg
UF15PC10-H	100V	50 60	30 30	0.33 0.29	0.50 0.52	2850 3400	5.8 6.4	205 226	16 20	0.63 0.79	53 58	0.8
UF15PC11-H	115V	50 60	31 31	0.26 0.25	0.41 0.43	2850 3400	5.8 6.4	205 226	16 20	0.63 0.79	53 58	0.8
UF15PC20-H	200V	50 60	29 29	0.15 0.14	0.23 0.25	2850 3400	5.8 6.4	205 226	16 20	0.63 0.79	53 58	0.8
UF15PC23-H	230V	50 60	29 29	0.12 0.12	0.19 0.19	2850 3400	5.8 6.4	205 226	16 20	0.63 0.79	53 58	0.8
UF15PC11-L	115V	50 60	31 31	0.17 0.15	0.21 0.20	1400 1700	2.5 3.0	88 106	3.8 5.5	0.15 0.22	31 37	0.8
UF15PC23-L	230V	50 60	29 29	0.08 0.07	0.09 0.09	1400 1700	2.5 3.0	88 106	3.8 5.5	0.15 0.22	31 37	0.8