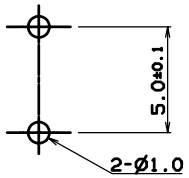

P.C.B DIMENSION

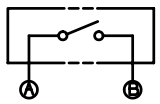

CIRCUIT DIAGRAM

NOTE
1. OPERATING FORCE : 180,250 ±50gf
2. TRAVEL : 0.25 +0.2/-0.1 mm
3. CONTACT RESISTANCE : 100 mΩ Max
4. GENERAL TOLERANCE : ±0.3

MODEL NO	H	STEM COLOR
MT 1101R	4.3	BLACK
MT 1101RA	5.0	WHITE

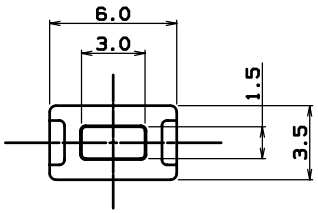

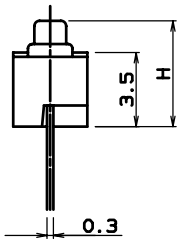

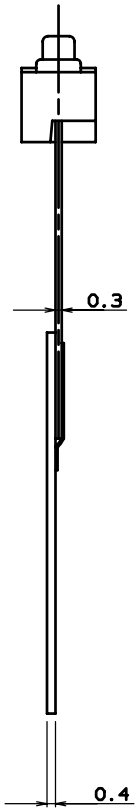

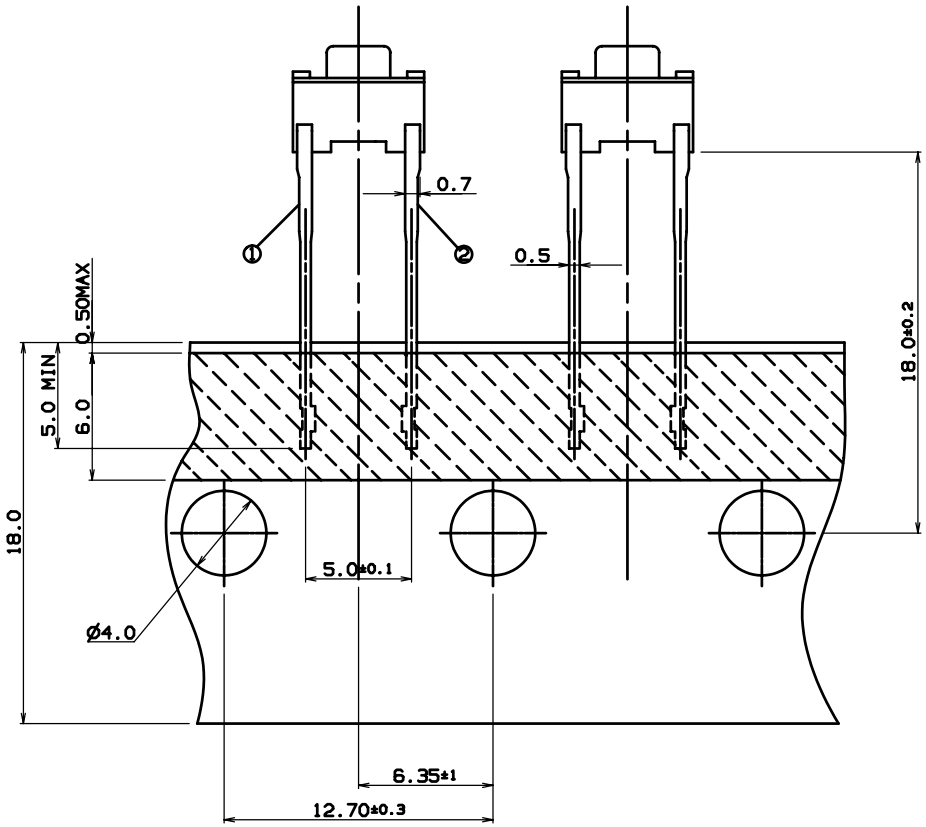

※ PACKING QUANYITY : 1,500 PCS

NO	PART NAME	Q'TY	MATERIAL	REMARK
1	CASE	1	NYLON 66 G30	BLACK
2	STEM	1	NYLON 66 G30	
3	COVER	1	SUS	
4	TERMINAL	1	C2680R-EH	Ag 0.5μ
5	CONTACT	1	SUS301-EH	Ag 0.5μ

No.	PART NAME	Q'TY	MATERIAL	SIZE	TREAT.	REMARKS
5						
4						
3						
2						
1						

NO.	DATE	NOTE	SIGN

3RD ANGLE PROJECTION | UNIT m/m | SCALE
APPROVED | CHECKED | DESIGNED

MODEL: MT1101R SERIES
DWG.NAME: ASS'Y DIAGRAM
DWG.NO.

MYUNG DO SYSTEM